Project_02 - Multibody kinematic modeling

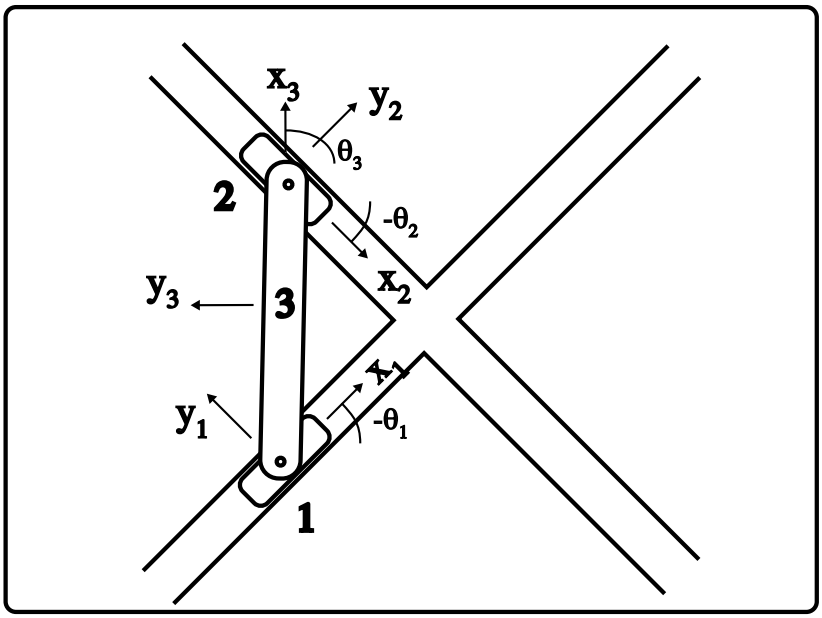

By: Thomas Sokolovic & Nicholas Pascua

In this project, a rigid bar is connected to two sliding pistons along the diagonal tracks. As the pistons move along the tracks, the rigid bar rotates at a constant rate, $\dot{\theta}_3 = 2\ rad/s$. The figure above has three *relative* ccoordinate systems that move with the bodies:

1. $x_1 - y_1 -$

   describes piston 1 position and orientation, θ_1

2. $x_2 - y_2 -$

   describes piston 2 position and orientation, θ_2

3. $x_3 - y_3 -$

   describes the rigid bar position and orientation, θ_3

Each of the pistons are on tracks at $\pm 45^o$ and the rotating rigid bar is 10 cm. The hinges are mounted to the center of the pistons connecting the ends of the rigid bar.

In this project, you need to

1. determine constraint equations $C(\mathbf{q},\ t)$
2. solve for the velocities, $\dot{q}$ and accelerations, $\ddot{q}$
3. visualize the motion of the system as the rigid bar goes through at least one full rotation

```
# cell 1
using NonlinearSolve,Plots, Latexify, LinearAlgebra, Symbolics, LaTeXStrings,Markdown
```

```
0.0:0.010506998841437435:3.141592653589793
```

```
# cell 2
# Geometry
begin
L = 0.10 # [m]
a = L / 2; # 0.05
ω = 2.0 # rad/s, # Prescribed motion
t0 = 0.0 # Time
N = 300
tf = π # one full rotation
ts = range(t0, tf, length=N)
end
```

```
(7, 8, 9)
```

```
# cell 3
# Generalized coordinates ordering
# q = [x1,y1,θ1, x2,y2,θ2, x3,y3,θ3]
begin
x1,y1,θ1 = 1,2,3
x2,y2,θ2 = 4,5,6
x3,y3,θ3 = 7,8,9
end
```

constraints! (generic function with 1 method)

```julia
# cell 4
function constraints!(C, q, p)
    t = p   # treat parameter as time

    # Driving constraint
    C[1] = q[θ3] - ω*t

    # Slider constraints
    C[2] = q[x1] - q[y1]
    C[3] = q[θ1] + π/4

    C[4] = q[x2] + q[y2]
    C[5] = q[θ2] - π/4

    # Bar hinges
    c = cos(q[θ3])
    s = sin(q[θ3])

    C[6] = q[x1] - (q[x3] - a*c)
    C[7] = q[y1] - (q[y3] - a*s)

    C[8] = q[x2] - (q[x3] + a*c)
    C[9] = q[y2] - (q[y3] + a*s)
end
```

Any[

1: # Constraint Equations (from Cell 4)

2: $q = [x_1,\ y_1,\ \theta_1,\ x_2,\ y_2,\ \theta_2,\ x_3,\ y_3,\ \theta_3]$

3:
$$\begin{aligned}
-2\,t + \theta_3 &= 0 \\
\mathtt{x_1} - \mathtt{y_1} &= 0 \\
0.7854 + \theta_1 &= 0 \\
\mathtt{x_2} + \mathtt{y_2} &= 0 \\
-0.7854 + \theta_2 &= 0 \\
\mathtt{x_1} - \mathtt{x_3} + 0.05\ \cos(\theta_3) &= 0 \\
\mathtt{y_1} - \mathtt{y_3} + 0.05\ \sin(\theta_3) &= 0 \\
\mathtt{x_2} - \mathtt{x_3} - 0.05\ \cos(\theta_3) &= 0 \\
\mathtt{y_2} - \mathtt{y_3} - 0.05\ \sin(\theta_3) &= 0
\end{aligned}$$

]

constraint_jacobian (generic function with 1 method)

```
# cell 5
function constraint_jacobian(q)
    Cq = zeros(9,9)

    Cq[1,θ3] = 1.0

    Cq[2,x1] =  1;  Cq[2,y1] = -1
    Cq[3,θ1] =  1

    Cq[4,x2] =  1;  Cq[4,y2] =  1
    Cq[5,θ2] =  1

    c = cos(q[θ3])
    s = sin(q[θ3])

    Cq[6,x1] = 1; Cq[6,x3] = -1; Cq[6,θ3] = -a*s
    Cq[7,y1] = 1; Cq[7,y3] = -1; Cq[7,θ3] =  a*c

    Cq[8,x2] = 1; Cq[8,x3] = -1; Cq[8,θ3] =  a*s
    Cq[9,y2] = 1; Cq[9,y3] = -1; Cq[9,θ3] = -a*c

    #return Cq
end
```

Ct (generic function with 1 method)

```
# cell 6
Ct() = vcat(-ω, zeros(8))
```

acceleration_rhs (generic function with 1 method)

```
# cell 7
function acceleration_rhs(q, qd)
    rhs = zeros(9)

    c = cos(q[θ3])
    s = sin(q[θ3])
    θd = qd[θ3]

    rhs[6] = -a*c*θd^2
    rhs[7] = -a*s*θd^2
    rhs[8] =  a*c*θd^2
    rhs[9] =  a*s*θd^2

    return rhs
end
```

```
0.7853981633974483
```

```julia
# cell 8 Initial guess
begin
q0 = zeros(9)
q0[θ1] = -π/4
q0[θ2] =  π/4
end
```

```
9×300 Matrix{Float64}:
 0.0  0.0  0.0  0.0  0.0  0.0  0.0  0.0  …  0.0  0.0  0.0  0.0  0.0  0.0  0.0  0.0
 0.0  0.0  0.0  0.0  0.0  0.0  0.0  0.0     0.0  0.0  0.0  0.0  0.0  0.0  0.0  0.0
 0.0  0.0  0.0  0.0  0.0  0.0  0.0  0.0     0.0  0.0  0.0  0.0  0.0  0.0  0.0  0.0
 0.0  0.0  0.0  0.0  0.0  0.0  0.0  0.0     0.0  0.0  0.0  0.0  0.0  0.0  0.0  0.0
 0.0  0.0  0.0  0.0  0.0  0.0  0.0  0.0     0.0  0.0  0.0  0.0  0.0  0.0  0.0  0.0
 0.0  0.0  0.0  0.0  0.0  0.0  0.0  0.0  …  0.0  0.0  0.0  0.0  0.0  0.0  0.0  0.0
 0.0  0.0  0.0  0.0  0.0  0.0  0.0  0.0     0.0  0.0  0.0  0.0  0.0  0.0  0.0  0.0
 0.0  0.0  0.0  0.0  0.0  0.0  0.0  0.0     0.0  0.0  0.0  0.0  0.0  0.0  0.0  0.0
 0.0  0.0  0.0  0.0  0.0  0.0  0.0  0.0     0.0  0.0  0.0  0.0  0.0  0.0  0.0  0.0
```

```julia
# cell 9
begin
Q = zeros(9, N)
Qd = zeros(9, N)
Qdd = zeros(9, N)
end
```

```julia
# cell 10
let q_guess = copy(q0)
    for (i,t) in enumerate(ts)
        prob = NonlinearProblem(constraints!, q_guess, t)
        sol  = solve(prob, NewtonRaphson())
        q    = sol.u

        Cq  = constraint_jacobian(q)
        qd  = -Cq \ Ct()
        qdd = -Cq \ acceleration_rhs(q, qd)

        Q[:,i]   = q
        Qd[:,i]  = qd
        Qdd[:,i] = qdd

        q_guess = q
    end
end
```

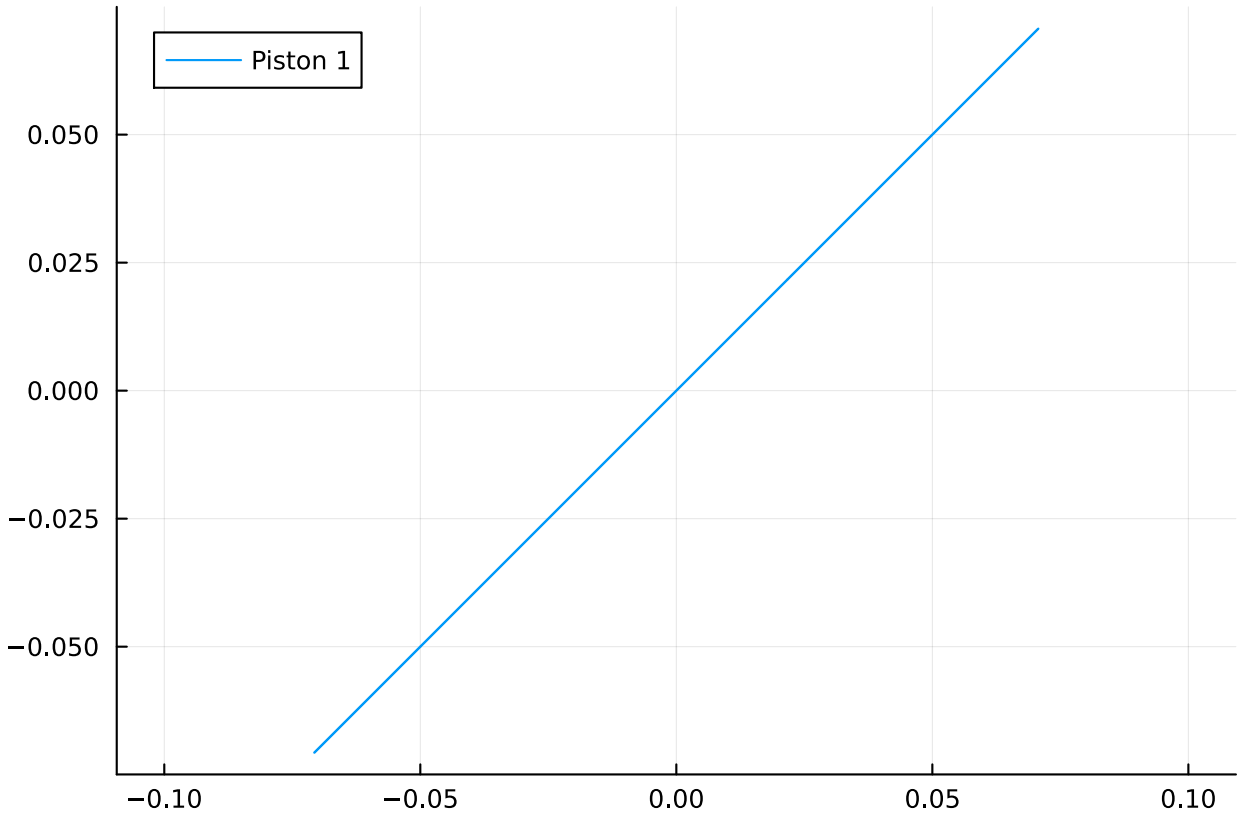


```
# cell 11
plot(Q[x1,:], Q[y1,:],
     aspect_ratio=1,
     label="Piston 1")
```

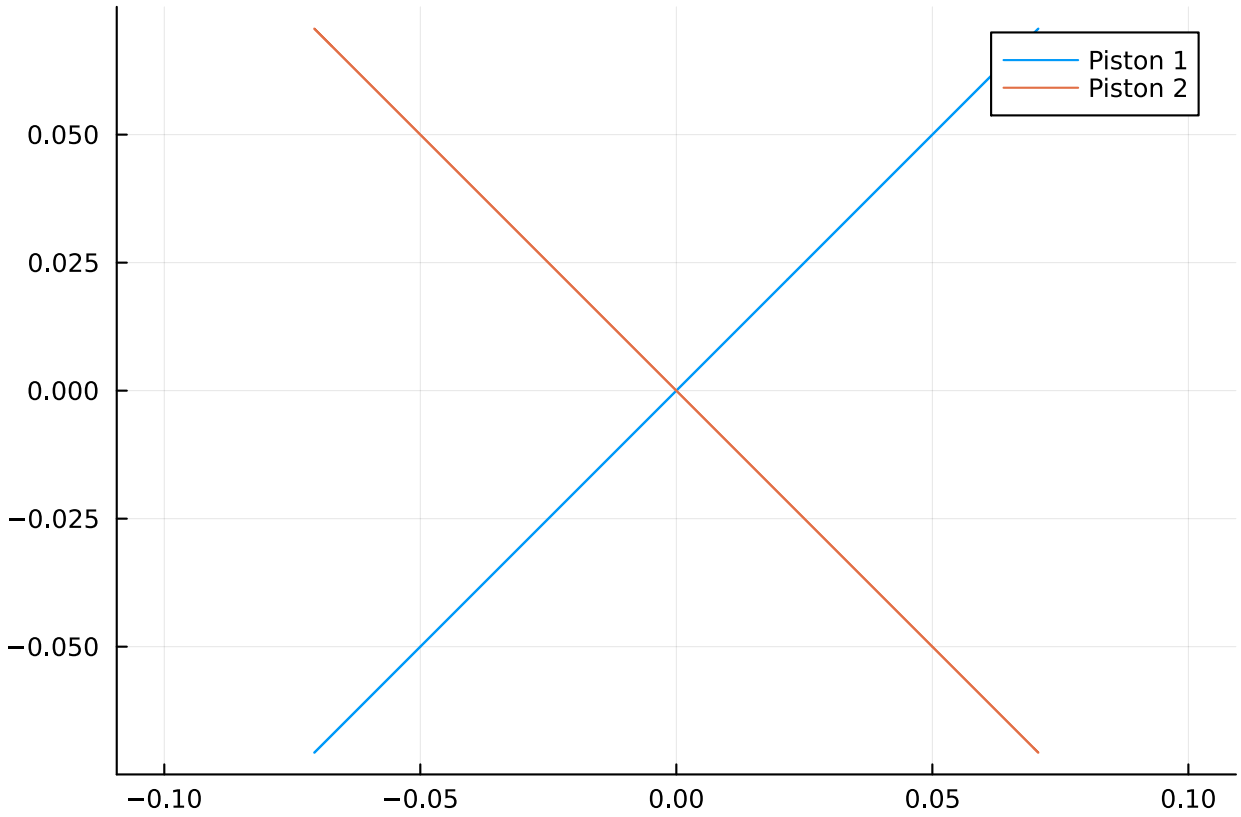


```
# cell 12
plot!(Q[x2,:], Q[y2,:],
      label="Piston 2")
```

```
anim =
  Animation("/var/folders/zz/8jwbh1j17nzfvbndjyh6x86m0000gn/T/jl_Ckvu2J", ["000001.png", "000
```

```julia
# cell 13
anim = @animate for i in 1:size(Q, 2)
    q = Q[:, i]

    # Bar orientation
    c = cos(q[θ3])
    s = sin(q[θ3])

    # Bar endpoints
    xL = q[x3] - a*c
    yL = q[y3] - a*s
    xR = q[x3] + a*c
    yR = q[y3] + a*s

    # Base plot
    plot(
        [-0.15, 0.15], [-0.15, 0.15],     # +45° track
        aspect_ratio = 1,
        xlims = (-0.15, 0.15),
        ylims = (-0.15, 0.15),
        legend = false,
        color = :black,
        lw = 1,
        title="Rigid Bar Motion with Sliding Pins Animation"
    )

    # ---- MISSING DIAGONAL (NOW ADDED) ----
    plot!([-0.15, 0.15], [0.15, -0.15],   # -45° track
          color = :black, lw = 1)

    # Rigid bar
    plot!([xL, xR], [yL, yR],
          lw = 3, color = :orange)

    # Pistons
    scatter!([q[x1], q[x2]],
             [q[y1], q[y2]],
             color = :green,
             markersize = 5)
end
```

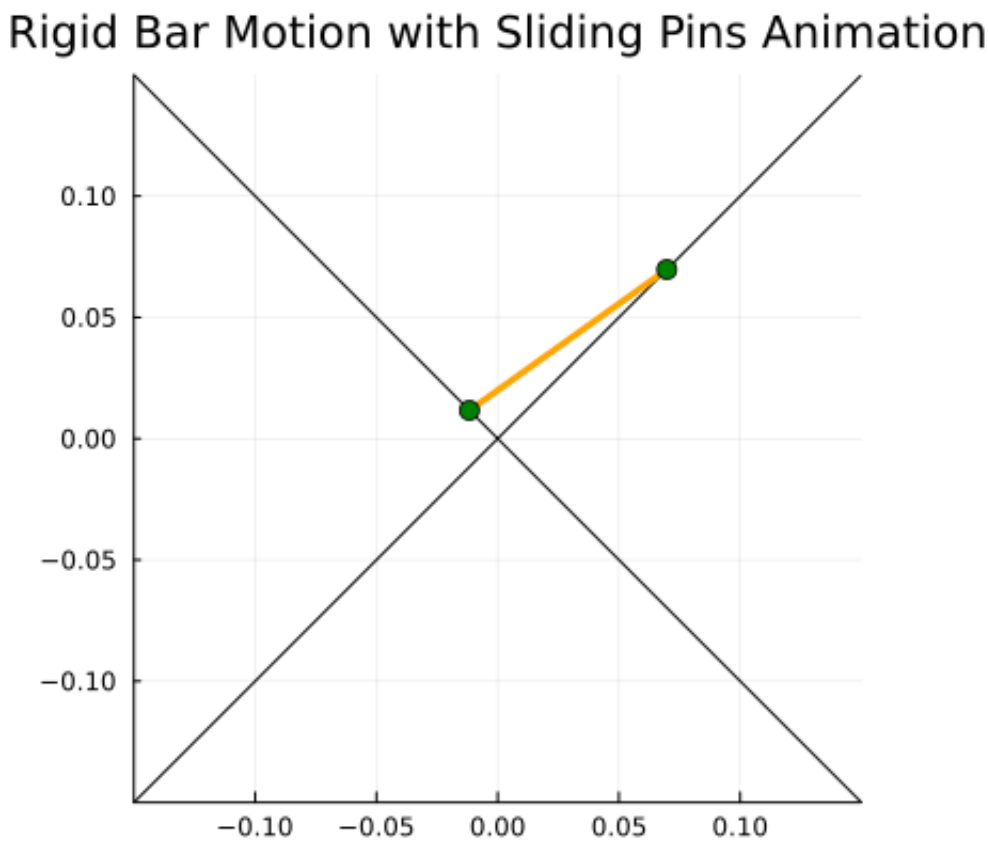


```
gif(anim, "dual_slider.gif", fps = 30)
```

```
Saved animation to /Users/nickpascua/Downloads/dual_slider.gif
```